FLOS

F6310004 Silver

Stylos

Designed by Achille Castiglioni, 1984



Halogen - 2 x 105W

Floor lamp emitting indirect and diffused light. Silver powder-coated steel base with opaline extruded polymethylmethacrylate (PMMA) diffuser column. on/off control of the two light sources located at either end of the column and managed via a double foot switch on the power cable.

Designed by Achille Castiglioni in 1984, Stylos turns a vertical column of light into a sculptural presence. It may appear simple, but every detail is deliberate, down to a weighted base that prevents tipping. Castiglioni famously drew inspiration from everyday materials and championed a 'less is more' philosophy that is evident in his work, which uses minimal elements to create larger-than-life designs. Stylos is a luminous totem that quietly transforms its surroundings.

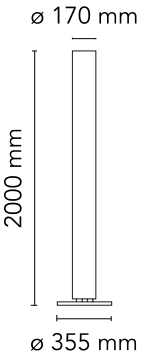

Are you a professional and your project needs consulting and support?

BOOK AN APPOINTMENT

Main specifications

EAN	8059607006238
Mounting	Floor
Environments	Indoor dry location
Light source type	Bulb
Light sources included	No
Lamp category	Halogen
Lamp holders	E27
Ilcos	HSGSA/W + IPAR
Number of lamps	2
Power (W)	105

Physical

Colour	Silver
Length (mm)	170
Cord colour	Black
Cord length (mm)	2850
Net weight (kg)	9.05
Package volume (m3)	0.15
IP internal	20

Download

Mounting instructions PDF

Photometric Files

LDT / IES LDT

Technical Drawings

2D ZIP

3D ZIP

©2026 Flos - P.IVA 00290820174 - 10/31/2026

In our constantly evolving world and business, technical upgrades happen every day. This means all product specifications and data are subject to change without warning in order t improve reliability, function, performance or otherwise. We make every effort to ensure the accuracy of our product images, however due to different lighting and screens used for viewing, the colours may vary. Images are indicative of the quality and style of the product but may not represent the precise details of the product you receive. This is because we are constantly working to make improvements. For aesthetic reasons, cables and/or electrical elements are often not shown. Refer to technical data sheets for all technical data. Images and colours are not part of any contract or warranty in any way.

IP 20

IK 00

Schematic light drawing

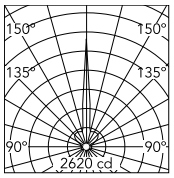

Luminous flux luminaire
3780 lm

Photometric

Lighting type	Total
Light distribution	Symmetric
Extreme cut off	No

Electrical

Insulation class	I
Frequency (Hz)	50/60
Main voltage (Vac)	220-250
Dimmable	No
Dimming interface	Switch Integrated (Not Dimmable)
Plug type	Type C
Batteries inside	No

©2026 Flos - P.IVA 00290820174 - 10/31/2026

In our constantly evolving world and business, technical upgrades happen every day. This means all product specifications and data are subject to change without warning in order t improve reliability, function, performance or otherwise. We make every effort to ensure the accuracy of our product images, however due to different lighting and screens used for viewing, the colours may vary. Images are indicative of the quality and style of the product but may not represent the precise details of the product you receive. This is because we are constantly working to make improvements. For aesthetic reasons, cables and/or electrical elements are often not shown. Refer to technical data sheets for all technical data. Images and colours are not part of any contract or warranty in any way.

Bulbs

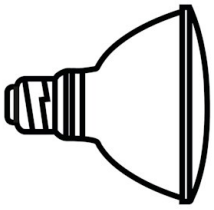

NOT INCLUDED

RF34147

LED Lamp E27 17W PAR38 Non-Dimmable

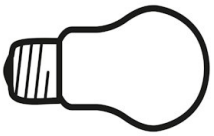

NOT INCLUDED

RF26998

LED 21W E27 2450lm 3000K DIMMER

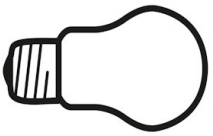

NOT INCLUDED

RF30429

LED Opal Lamp E27 21W 2700K A65 Dimmable

©2026 Flos - P.IVA 00290820174 - 10/31/2026

In our constantly evolving world and business, technical upgrades happen every day. This means all product specifications and data are subject to change without warning in order t improve reliability, function, performance or otherwise. We make every effort to ensure the accuracy of our product images, however due to different lighting and screens used for viewing, the colours may vary. Images are indicative of the quality and style of the product but may not represent the precise details of the product you receive. This is because we are constantly working to make improvements. For aesthetic reasons, cables and/or electrical elements are often not shown. Refer to technical data sheets for all technical data. Images and colours are not part of any contract or warranty in any way.

Spare Parts

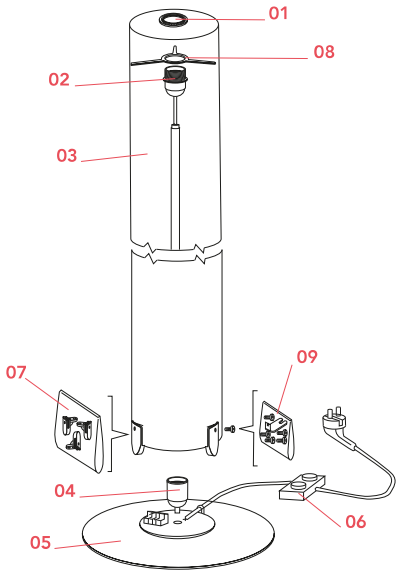

01.	Ring Nut Lamp Holder	RF30384
02.	Stylos Top lamp holder assembly	RF6320100
03.	Stylos external diffuser	RF6330000
04.	Stylos Assembly Lamp holder	RF6320200
05.	Stylos Base	F6320004
06.	Stylos Double Black switch	RF03631
07.	Stylos Kit of n.3 diffuser bracket supports	RF6330100
08.	Stylos Polycarbonate spacer	RF05861
09.	Stylos Kit of screws and metal bracket for diffuser assembly	RF6330200

©2026 Flos - P.IVA 00290820174 - 10/31/2026

In our constantly evolving world and business, technical upgrades happen every day. This means all product specifications and data are subject to change without warning in order t improve reliability, function, performance or otherwise. We make every effort to ensure the accuracy of our product images, however due to different lighting and screens used for viewing, the colours may vary. Images are indicative of the quality and style of the product but may not represent the precise details of the product you receive. This is because we are constantly working to make improvements. For aesthetic reasons, cables and/or electrical elements are often not shown. Refer to technical data sheets for all technical data. Images and colours are not part of any contract or warranty in any way.



RF30384

Ring Nut Lamp Holder



RF6320100

Stylos Top lamp holder assembly

RF6330000

Stylos external diffuser



RF6320200

Stylos Assembly Lamp holder



F6320004

Stylos Base



RF03631

Stylos Double Black switch



RF6330100

Stylos Kit of n.3 diffuser bracket supports



RF05861

Stylos Polycarbonate spacer

©2026 Flos - P.IVA 00290820174 - 10/31/2026

In our constantly evolving world and business, technical upgrades happen every day. This means all product specifications and data are subject to change without warning in order t improve reliability, function, performance or otherwise. We make every effort to ensure the accuracy of our product images, however due to different lighting and screens used for viewing, the colours may vary. Images are indicative of the quality and style of the product but may not represent the precise details of the product you receive. This is because we are constantly working to make improvements. For aesthetic reasons, cables and/or electrical elements are often not shown. Refer to technical data sheets for all technical data. Images and colours are not part of any contract or warranty in any way.



RF6330200

Stylos Kit of screws and metal bracket for diffuser assembly

©2026 Flos - P.IVA 00290820174 - 10/31/2026

In our constantly evolving world and business, technical upgrades happen every day. This means all product specifications and data are subject to change without warning in order t improve reliability, function, performance or otherwise. We make every effort to ensure the accuracy of our product images, however due to different lighting and screens used for viewing, the colours may vary. Images are indicative of the quality and style of the product but may not represent the precise details of the product you receive. This is because we are constantly working to make improvements. For aesthetic reasons, cables and/or electrical elements are often not shown. Refer to technical data sheets for all technical data. Images and colours are not part of any contract or warranty in any way.